Electrolux PROFESSIONAL

Salamanders
Ultra Rapid Electric Salamander, open on 3 sides - 600 mm

ITEM #

MODEL #

NAME #

SIS #

AIA #



283011 (E0UUCEBOMOH)	Electric Salamander, Ultra Rapid, open on 3 sides, with Plate detenction system, 600 mm, accepts GN 1/1
283012 (E0UUCDBOMOH)	Electric Salamander, Ultra Rapid, open on 3 sides, with Plate detenction system, 600 mm, accepts GN 1/1

Short Form Specification

Item No.

Constructed in AISI 304 stainless steel. Table top model can be hanged on the wall with wall brackets (optional). Open on 3 sides. 2 individually controlled cooking zones heated by high efficient infrared heating elements. No preheating neeed, reduced heat emission in the kitchen. Control knob to set cooking time (from 0 to 99 minutes) showed on digital display. Touch-controlled plate detecting bar to activate heating elements. Air vents along the upper side for evacuating heat and smoke. Movable plate, sliding smoothly up and down along a rail system. Removable chromed steel cooking grid and stainless steel grease collecting container.

APPROVAL:

Main Features

- 2 indipendent high-efficient tungsten filament heating elements allowing to heat up a half or full cooking surface.
- Fast heat up: about 20 seconds to work at full performance.
- Cooking plate size: 600x350 mm accept GN 1/1.
- Touch-controlled plate detecting bar switches on the salamander when the plate is placed in the appliance and switches it off when when the plate is removed.
- Control panel with a knob and digital display to set the cooking time.
- Timer can be set from 0 to 99 minutes and interrupts electricity supply at the end of cooking time.
- Set time can be stored to simplify the repetition of similar cooking cycles.
- START and STOP touch button.

Construction

- Made of AISI 304 stainless steel.
- Air vents along the upper side for evacuating heat and smoke.
- Removable stainless steel drip tray.
- Movable upper plate.
- Chromium-plated steel grid with a safety stop to avoid accidental fall.
- Table top unit can be wall mounted with dedicated optional accessory.
- 4 rubber feet.

Sustainability

- This model is compliant with Swiss Energy Efficiency Ordinance (730.02).

Optional Accessories

- Wall mounted brackets kit for salamanders open on 3 sides — PNC 283035 ❑

Salamanders
Ultra Rapid Electric Salamander, open on 3 sides - 600 mm

Front

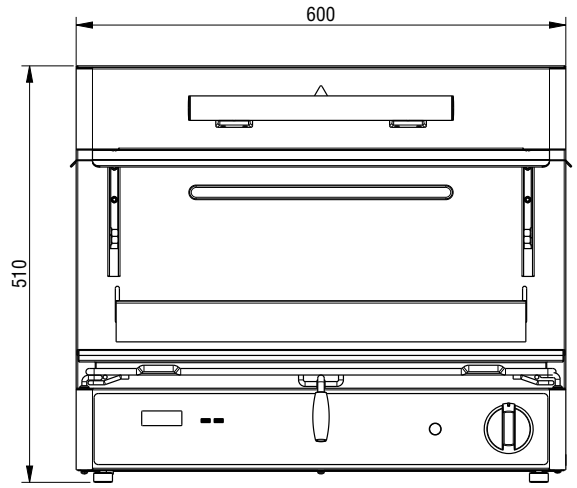

Side

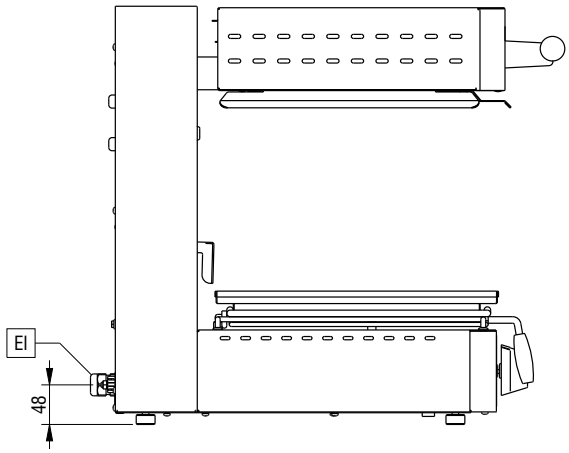

EI = Electrical inlet (power)

Top

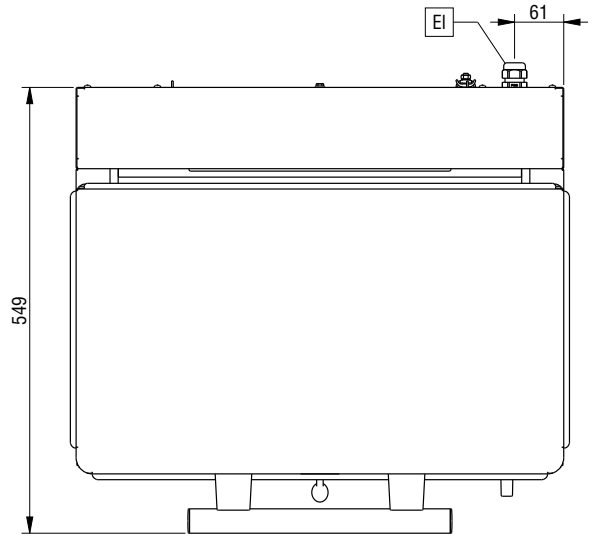

Electric

Supply voltage:	
283011 (E0UUCEBOMOH)	220-240 V/1 ph/50/60 Hz
283012 (E0UUCDBOMOH)	380-415 V/3N ph/50/60 Hz
Electrical power max.:	4 kW

Key Information:

External dimensions, Width:	600 mm
External dimensions, Depth:	549 mm
External dimensions, Height:	510 mm
Net weight:	50 kg

The company reserves the right to make modifications to the products without prior notice. All information correct at time of printing.

2026.11.20